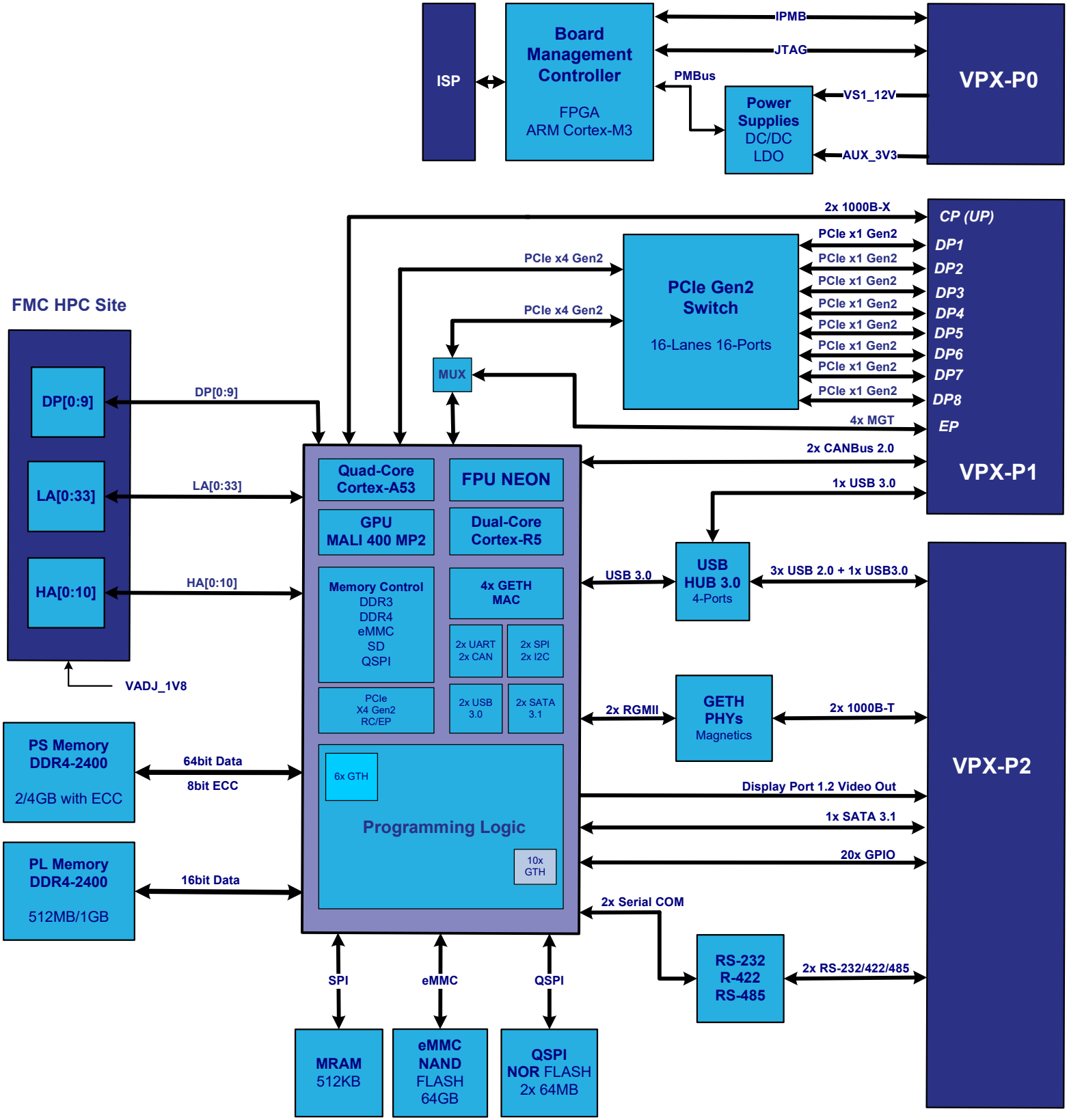
ISP
Board Management Controller
FPGA
ARM Cortex-M3
IPMB
JTAG
PMBus
Power Supplies
DC/DC
LDO
VS1_12V
AUX_3V3
VPX-P0
2x 1000B-X
CP (UP)
PCIe x1 Gen2
DP1
DP2
DP3
DP4
DP5
DP6
DP7
DP8
PCIe x4 Gen2
PCIe x4 Gen2
PCIe Gen2 Switch
16-Lanes 16-Ports
MUX
4x MGT
EP
2x CANBus 2.0
1x USB 3.0
VPX-P1
FMC HPC Site
DP[0:9]
LA[0:33]
HA[0:10]
VADJ_1V8
DP[0:9]
LA[0:33]
HA[0:10]
Quad-Core Cortex-A53
FPU NEON
GPU MALI 400 MP2
Dual-Core Cortex-R5
Memory Control
DDR3
DDR4
eMMC
SD
QSPI
4x GETH MAC
2x UART
2x CAN
2x SPI
2x I2C
PCIe
X4 Gen2
RC/EP
2x USB 3.0
2x SATA 3.1
6x GTH
Programming Logic
10x GTH
USB 3.0
USB HUB 3.0
4-Ports
3x USB 2.0 + 1x USB3.0
2x RGMII
GETH PHYs
Magnetics
2x 1000B-T
VPX-P2
Display Port 1.2 Video Out
1x SATA 3.1
20x GPIO
PS Memory
DDR4-2400
2/4GB with ECC
64bit Data
8bit ECC
PL Memory
DDR4-2400
512MB/1GB
16bit Data
2x Serial COM
RS-232
R-422
RS-485
2x RS-232/422/485
SPI
eMMC
QSPI
MRAM
512KB
eMMC
NAND
FLASH
64GB
QSPI
NOR FLASH
2x 64MB